MISSA Project: focus on Model-based safety assessment for the three stages of refinement of the system development process in ARP4754A

Airbus:	Matthias Bretschneider, ***Chris Papadopoulos***
Alenia Aeronautica SpA:	Antonella Cavallo
Cassidian-APSYS:	Jean-Pierre Heckmann, Laurent Sagaspe
Dassault Aviation:	Valerie Sartor
Foundation Bruno Kessler:	Marco Bozzano
ONERA:	Pierre Bieber, Rémi Delmas, ***Christel Seguin***
OFFIS:	Eckard Boede
Prover Technology AB:	Johann Deneux
University of York:	Oleg Lisagor
Thales:	Marion Morel

MISSA project

- More Integrated System Safety Assessment
  - FP7 EU project 2008-2011 project
  - coordinator Airbus

- Scope: safety assessment at complementary design stages

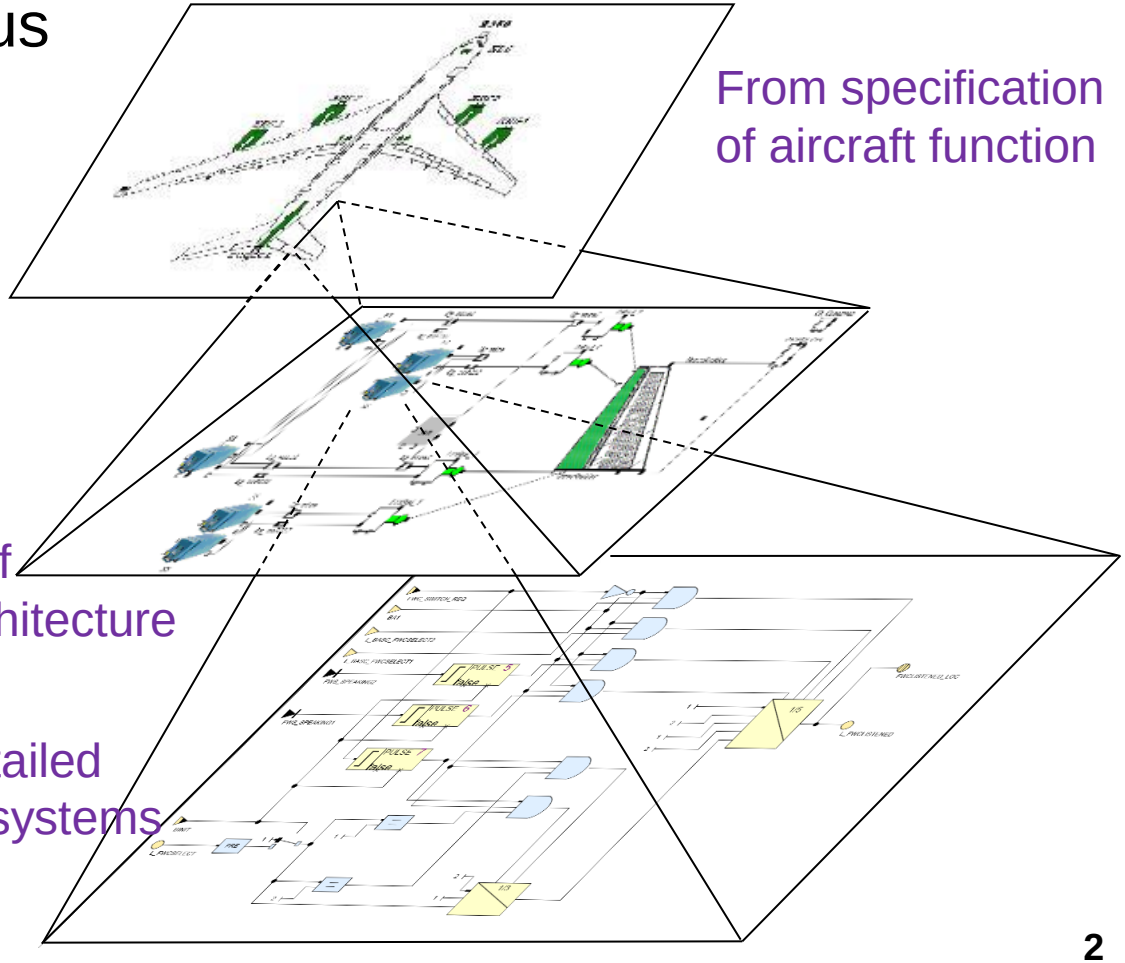

From specification of aircraft function

To design of aircraft system architecture

Until detailed design of systems

ARP4754A in MISSA

- MISSA approach:
  - Safety assessment based on formal simulation models (cf new ARP 4761)
- Talk focus: support of:
  - PASA/PSSA
  - Safety requirement allocation
  - SSA

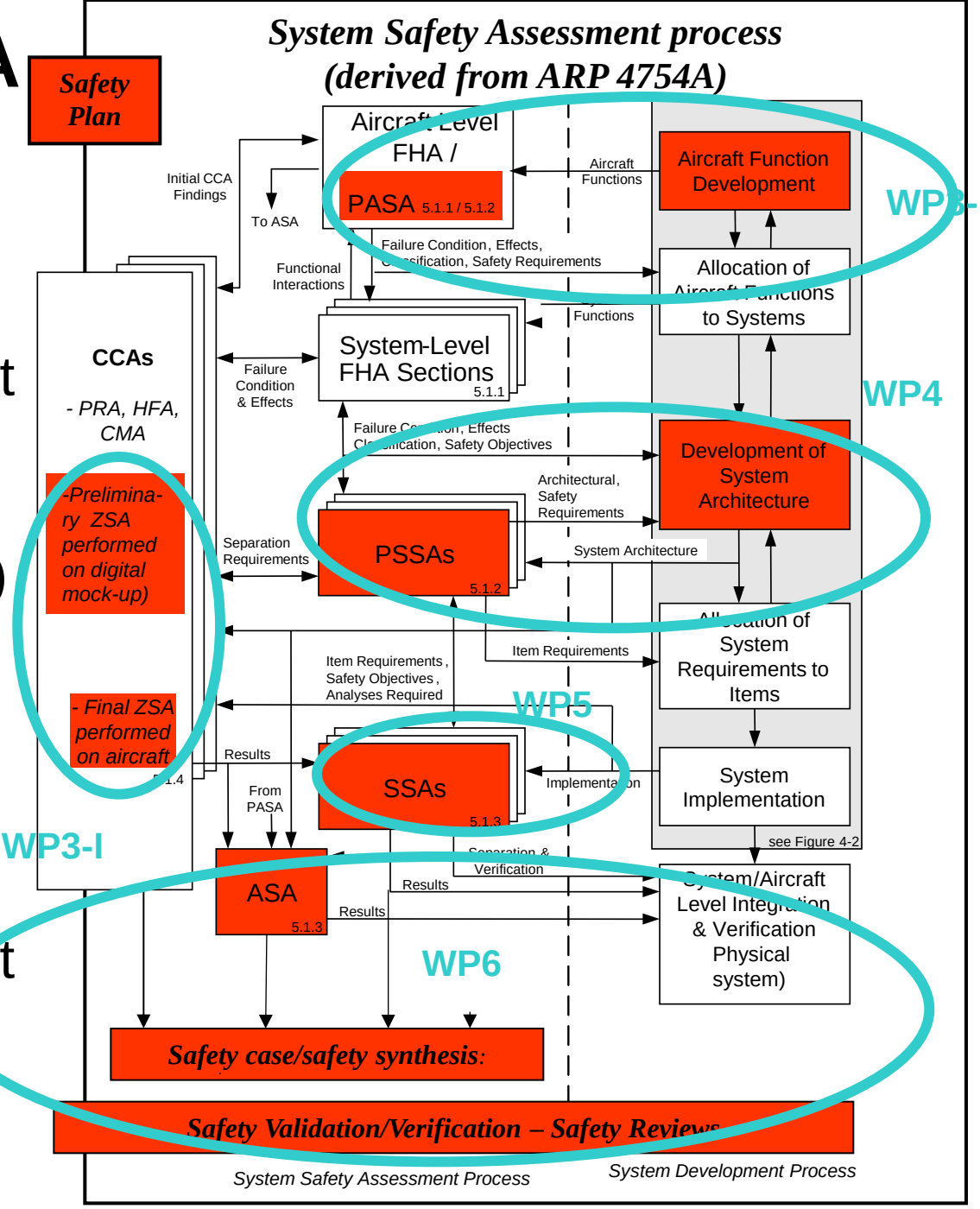

Model based Preliminary Aircraft/ System Safety Assessment - 1

- Need: Assess preliminary design against safety requirements
  - Ex: A failure condition (FC) severity and derived requirements
    - *FC: Unannounced loss of deceleration capability on ground is CAT*
    - *Quant. Req. :* The FC occurrence probability shall be less than 10-9/F H
      under hypothesis about system check interval
    - *Qual. Req.* : No single failure shall lead to the FC
    - *DAL Req.* : Development Assurance Levels (DAL) of functions/items shall be compliant with ARP4754A rules.

Model based Preliminary Aircraft / System Safety Assessment - 2

- Approach
  - Scope: Aircraft functions, mono / multi ATA systems
  - Build abstract models of failure propagation in the system
    - Use automata-like + Boolean modeling languages,
    - Model the dynamic of each system component
    - Connect the component to reflect the system architecture
    - Add observers of system FC
  - Assess the model against safety requirements with available tools
    - Extract from the models fault trees / cut sets of FC with model dedicated tools
      - => check of Qual. Req and DAL
    - Apply traditional tools to cut sets / tree for quantitative assessment

Model based Preliminary Aircraft/ System Safety Assessment -3

- Experimental feedback
  - Need for user's modeling guideline
    - Failure Logic Modeling: close to fault tree style
    - Vs Failure Effect Modeling: close to design model style
  - Tools are available
    - Mature enough for 1 ATA assessment
      - e.g. Cecilia OCAS from Dassault Aviation
    - Encouraging results both for
      - models of aircraft functions
      - Multi-ATA models

Model based Preliminary Aircraft / System Safety Assessment -4

- MISSA integrated case study

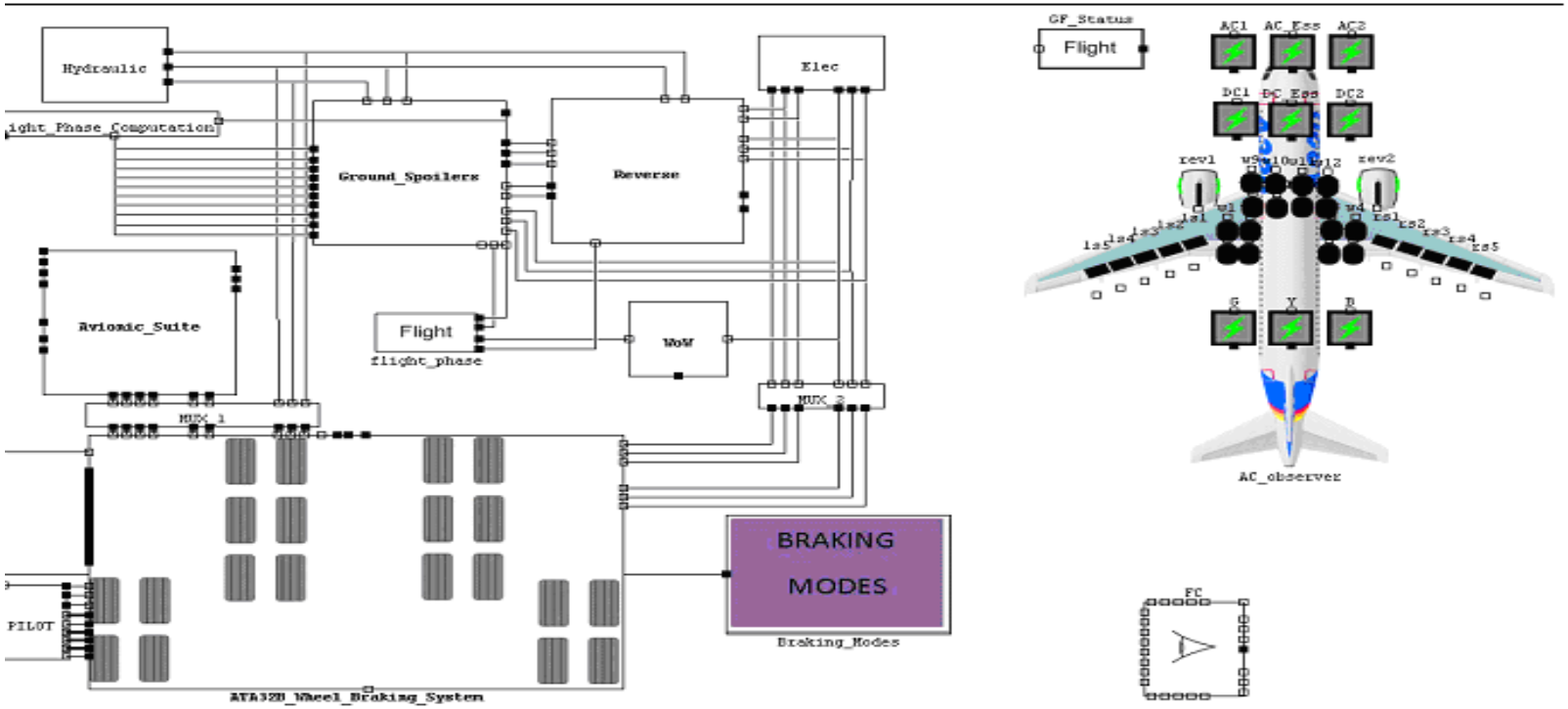

Model based Preliminary Aircraft / System Safety Assessment -5

- MISSA assessment results

System	Organisation Responsible	Model Features			Analysis Features	
		Modelling Approach	*Number of Basic Components*	*Overall number of events*	*Number of FCs from FHA*	*MCS computation time (to max of 3 failures)*
Wheel Braking System	Airbus (UK)	FEM	517	974	9	Minutes to hours depending on the observer
Ground Spoilers & Thrust Reversers	EADS APSYS	FEM	111	100	6	~40 minutes
Weight on Wheels	Dassault Aviation	FEM	35	48	1	<1 minutes
Integrated Modular Avionics	THALES	FEM/FLM Hybrid	80	200	25	~5 minutes
Electrical Power Distribution	Alenia Aeronautica	FEM/FLM Hybrid & 'pure' FEM	~ 30	~ 50	5	~5 minutes
Hydraulic Power Distribution	Airbus (Germany)	FEM/FLM Hybrid	78	70	8	<1 minutes

Model based System Safety Assessment - 1

- Need: Assess detailed design against safety requirements and functional safety requirements
- Approach
  - Use existing design model (e.g. Simulink / Scade models)
  - Inject failure modes
  - Use previous assessment tools + model checkers
- Experimental feedback
  - Detailed models are not easily "provable"
    - Hybrid models mixing discrete and continuous time evolution laws
    - Timed models, to reason about system delays
  - Tools developed in MISSA
    - Encouraging results: application to toy industrial case studies

Safety requirement management - 1

- Need 1: verify / generate the safety requirements allocation
  - Input =
    - Initial system safety requirements
    - System model or cut sets leading to the system FCs
    - User optimization criteria
  - Output = valid safety requirements applicable to the component of the system
    - failure rates, check interval, FDAL, independence groups
- Approach: two tools solving problems of optimal allocation
  - Opt-Alloc: preliminary design exploration taking into account various user criteria (weight, cost of equipments, ...)
  - DAL-calculator: allocation of average risks and FDAL taking into account standard recommendations

Safety requirement management - 2

- Experimental feedback for DALculator
  - From small examples …

    Performances : DAL, Probability (<1 sec)
    - Data display

    Nbr of Mincuts : From 11 to 51 (order 3 to 9)
    - Deceleration function

    Nbr of Mincuts : From 4 to 68 (order 2 to 4)

  - … to larger examples
    - Electrical System

    Nbr of Mincuts : from 300 to 1800 (order 3)

    Performances : DAL(< 10 sec), Probability (from 5 min to 40 min)
    - MISSA Common Case-Study

    Nbr of Mincuts : 3000 (order 3)

    Performances : DAL(< 5 min)

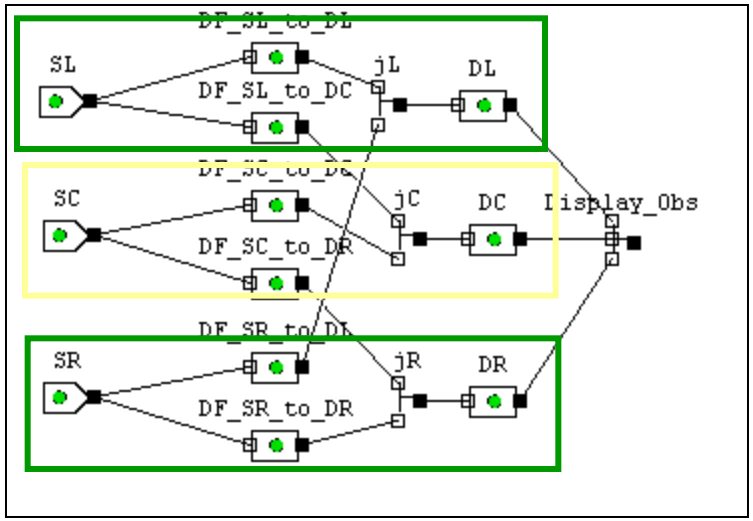

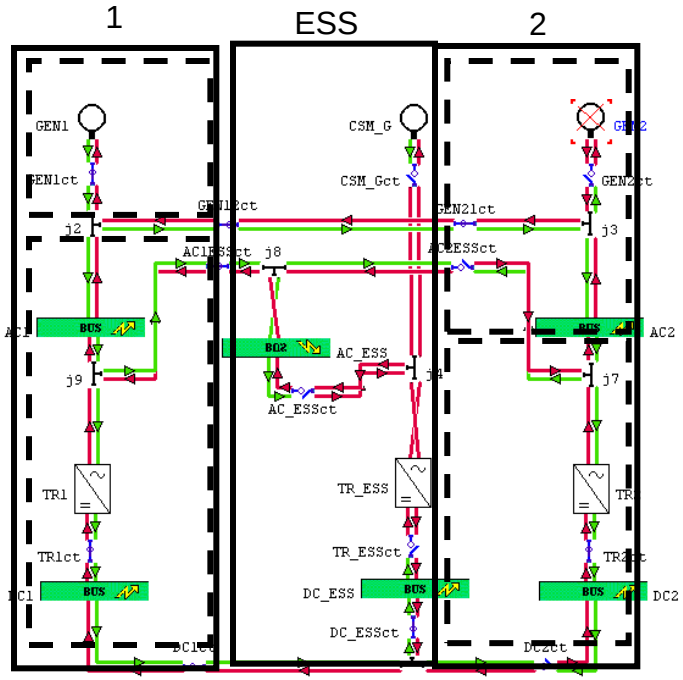

Safety requirement management - 3

- Need 2: reason on "safety contract"
- Approach: tools to assess design following contracts paradigm
  - *Assumptions*
    - Reflect current degree of knowledge of anticipated design context
    - Determine boundary conditions on actual design context
  - *Guarantee*
    - Is guaranteed if component is used in assumed design
- Experimental feedback
  - Applied to ARP4754 braking systems

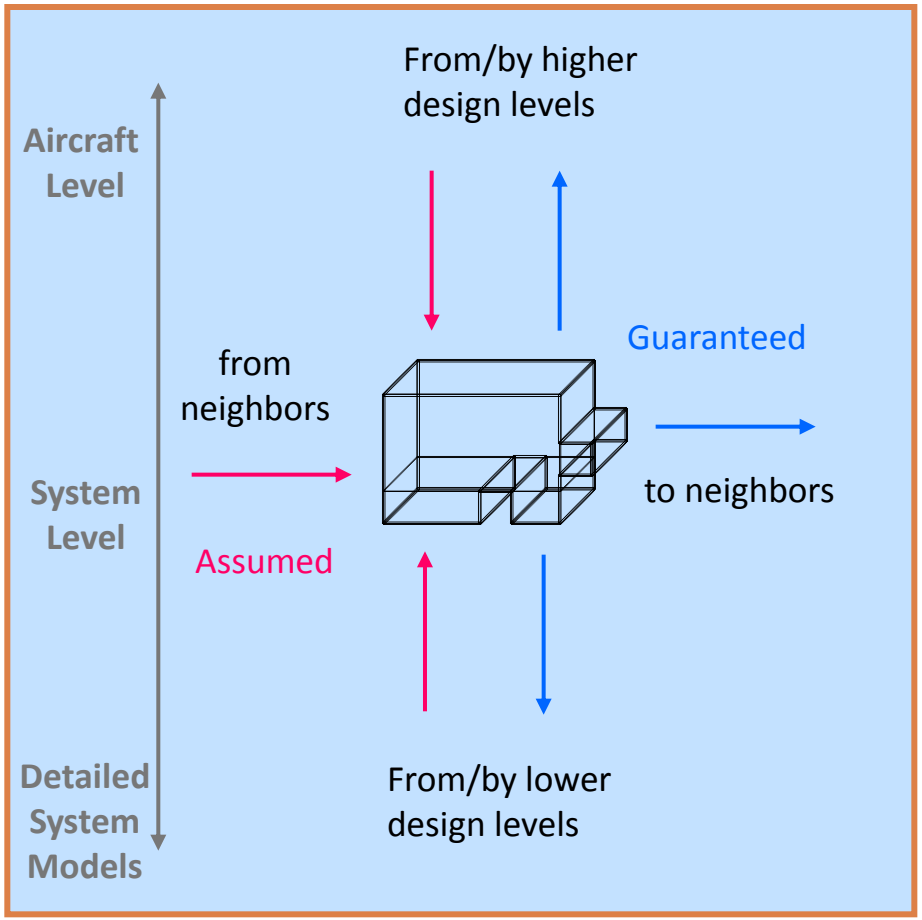

Conclusion

- MISSA provided a comprehensive set of methods and tools to assist
  - Safety requirement management
  - Requirement assessment on formal models
  - At various design stages: from aircraft function to system design
- All proposals have been tested on industrial case studies
  - Good maturity level of PSSA by existing tools
  - More experiments are needed for other promising tools
- For more details http://www.missa-fp7.eu/